Ordering number: EN 1434G

N MOS LSI

No.1434G

LM7000, 7000N

Direct PLL Frequency Synthesizer for Electronic Tuning

Features

- The LM7000N is a modified version of the LM7000 whose phase comparator dead zone is changed.
- High-speed programmable divider capable of direct dividing FM band VCO frequency.
- Reference frequency (7 kinds) : 100,50,25,10,9,5,1kHz
- Output for band select (3 bits)
- Clock output for controller (400kHz)
- Time base output for clock (8Hz)
- Data input : Serial input (CE,CL,DATA pins)
- On-chip IF count circuit : FM : ±10kHz
  MW, SW : ±3kHz
  LW : ±0.6kHz

Absolute Maximum Ratings at Ta = 25°C, V_{SS} = 0V

				unit
Maximum Supply Voltage	V_{DD} max	$V_{DD}1, V_{DD}2$	−0.3 to +7.0	V
Maximum Input Voltage	V_{IN1} max	CE,CL,DATA,STRQ	−0.3 to +7.0	V
	V_{IN2} max	Input pins other than $V_{IN}1$	−0.3 to V_{DD}+0.3	V
Maximum Output Voltage	V_{OUT1} max	$\overline{SYC}$,$\overline{STOUT}$	−0.3 to +7.0	V
	V_{OUT2} max	$\overline{BO1}$,$\overline{BO2}$,$\overline{BO3}$	−0.3 to +13	V
	V_{OUT3} max	Output pins other than $V_{OUT1,2}$	−0.3 to V_{DD}+0.3	V
Allowable Power Dissipation	Pd max	Ta = 85°C	300	mW
Operating Temperature	Topr		−40 to +85	°C
Storage Temperature	Tstg		−55 to +125	°C

Pin Assignment

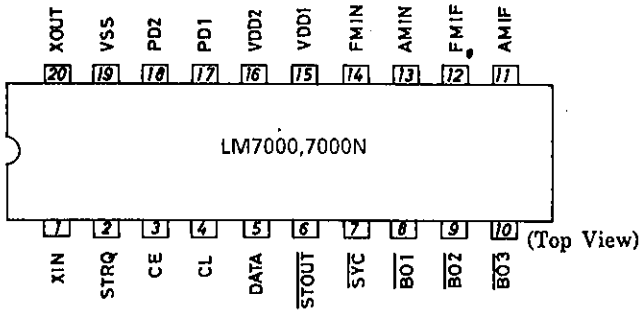

Package Dimensions 3021B

(unit : mm)

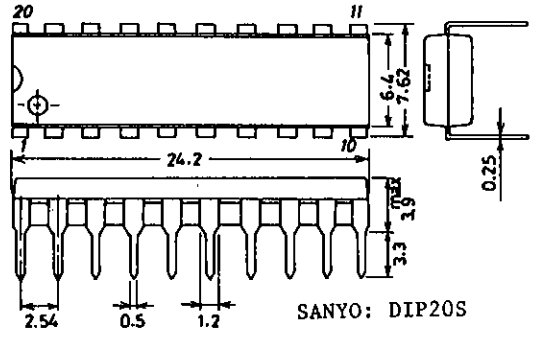

SANYO: DIP20S

SANYO Electric Co., Ltd. Semiconductor Business Headquarters
TOKYO OFFICE Tokyo Bldg., 1-10, 1 Chome, Ueno, Taito-ku, TOKYO, 110 JAPAN

Allowable Operating Conditions at Ta = −40 to +85°C, V_{SS} = 0V

				unit
Supply Voltage	V_{DD1}	V_{DD1},PLL operation	4.5 to 6.5	V
	V_{DD2}	V_{DD2},Xtal OSC time base	3.5 to 6.5	V
Input 'H'-Level Voltage	V_{IH}	CE,CL,DATA,STRQ	2.2 to 6.5	V
Input 'L'-Level Voltage	V_{IL}	CE,CL,DATA,STRQ	0 to 0.7	V
Output Voltage	V_{OUT1}	$\overline{SYC}$,$\overline{STOUT}$	0 to 6.5	V
	V_{OUT2}	$\overline{BO1}$,$\overline{BO2}$,$\overline{BO3}$	0 to 13	V
Output Current	I_{OUT}	$\overline{BO1}$,$\overline{BO2}$,$\overline{BO3}$,V_{DD} = 4.5 to 6.5V	0 to 3.0	mA
Input Frequency	fin1	XIN,sine wave,capacitive coupling	1.0 to 7.2typ to 8.0	MHz
	fin2	FMIN, 〃 (Note 1),※(S=1)	45 to 130	MHz
	fin3	FMIN, 〃 (Note 2),※(S=1)	5 to 30	MHz
	fin4	AMIN, 〃 ,※(S=0)	0.5 to 10	MHz
	fin5	FMIF, 〃	10.0 to 10.7typ to 11.5	MHz
	fin6	AMIF, 〃	400 to 450typ to 500	kHz
Oscillation-Guaranteed Crystal Resonator	Xtal	XIN-XOUT,$C_I \leqq 30\Omega$	5.0 to 7.2typ to 8.0	MHz
Input Amplitude	Vin1	XIN,sine wave,capacitive coupling	0.5 to 1.5	Vrms
	Vin2	FMIN, 〃	0.1 to 1.5	Vrms
	Vin3	AMIN, 〃	0.1 to 1.5	Vrms
	Vin4	FMIF, 〃	0.1 to 1.5	Vrms
	Vin5	AMIF, 〃	0.1 to 1.5	Vrms

※ : 'S' : Control bit in serial data
(Note 1) : fref = 100,50,25kHz (Note 2) : Reference freqeuncy other than fref = (Note 1)

Electrical Characteristics / Under allowable operating conditions

				min	typ	max	unit
On-chip Feedback Resistance	R_{f1}	XIN			1.0		MΩ
	R_{f2}	FMIN			0.5		MΩ
	R_{f3}	AMIN			0.5		MΩ
	R_{f4}	FMIF			0.5		MΩ
	R_{f5}	AMIF			0.5		MΩ
Input 'H'-Level Current	I_{IH}	CE,CL,DATA,STRQ	V_I = 6.5V			5.0	μA
Input 'L'-Level Current	I_{IL}	CE,CL,DATA,STRQ	V_I = 0V			5.0	μA
Output 'L'-Level Voltage	V_{OL1}	FMIF,AMIF,FMIN,AMIN	I_O = 0.5mA			3.5	V
	V_{OL2}	$\overline{SYC}$	I_O = 0.1mA,(Note 3)	0.02		0.3	V
Output Off Leak Current	I_{off1}	$\overline{SYC}$	V_O = 6.5V			5.0	μA
Output 'L'-Level Voltage	V_{OL3}	$\overline{STOUT}$	I_O = 1.0mA			1.0	V
Output Off Leak Current	I_{off2}	$\overline{STOUT}$	V_O = 6.5V			5.0	μA
Output 'L'-Level Voltage	V_{OL4}	$\overline{BO1}$ to $\overline{3}$	I_O = 2.0mA			1.0	V
Output Off Leak Current	I_{off3}	$\overline{BO1}$ to $\overline{3}$	V_O = 13V			3.0	μA
Output 'H'-Level Voltage	V_{OH1}	PD1,2	I_O = 0.1mA	0.5V_{DD}			V
Output 'L'-Level Voltage	V_{OL5}	PD1,2	I_O = 0.1mA			0.3	V
'H'-Level Tri-state Off Leak Current	I_{offH}	PD1,2	V_O = V_{DD}		0.01	10.0	nA
'L'-Level Tri-state Off Leak Current	I_{offL}	PD1,2	V_O = 0V		0.01	10.0	nA
Supply Voltage	I_{DD1}	V_{DD1} + V_{DD2}	(Note 4)		25	40	mA
	I_{DD2}	V_{DD2}	PLL stop		2.0	3.5	mA
Input Capacitance	c_{in}	FMIN		1	2	3	pF

(Note 3) V_{DD} = 3.5 to 6.5V

(Note 4) 7.2MHz Xtal connected across XIN and XOUT
fin2 = 130MHz
$V_{IN}2$ = 100mVrms
Other input pins = V_{SS}
Output pins = Open

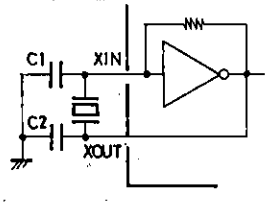

Kinseki Co.,Ltd
HC43/U: 2114-84521 (1) : CL = 10pF C1 = 15 (10 to 22)pF C2 = 15pF
HC43/U: 2114-84521 (2) : CL = 16pF C1 = 22 (15 to 33)pF C2 = 33pF
Nihon Denpa Kogyo Co.,Ltd
NR-18: LM-X-0701 : CL = 10pF C1 = 15pF C2 = 15pF

Equivalent Circuit Block Diagram

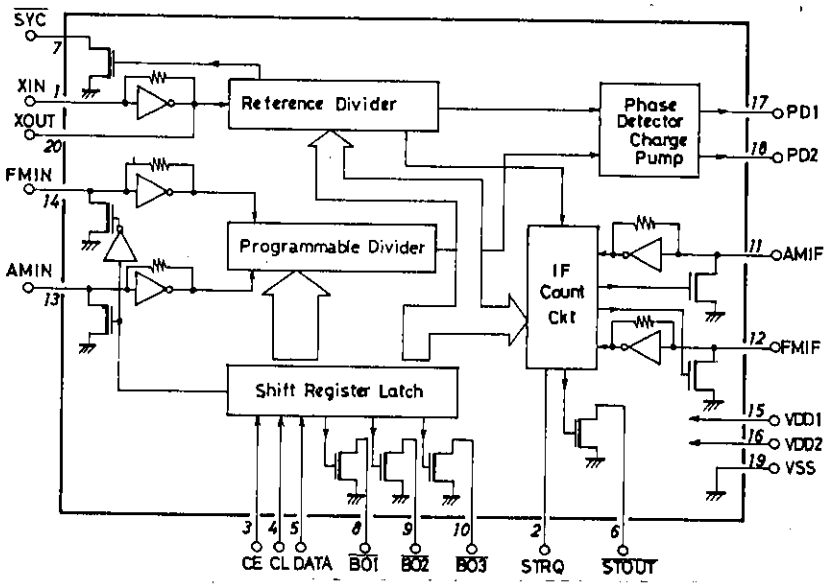

Pin Description

$\overline{SYC}$	: Controller clock (400kHz)
XIN,XOUT	: Xtal OSC (7.2MHz), on-chip feedback resistor
FMIN,AMIN	: Local oscillation signal input
CE,CL,DATA	: Data input
$\overline{BO1}$,$\overline{BO2}$,$\overline{BO3}$	: Band data output, $\overline{BO1}$ can be also used for time base output (8Hz)
$\overline{STRQ}$	: IF count request input
$\overline{STOUT}$	: Auto search stop signal output
V_{DD1},V_{DD2},V_{SS}	: Power supply (V_{DD2} is for backup)
AMIF,FMIF	: IF signal input
PD1,PD2	: Charge pump output

Data Input

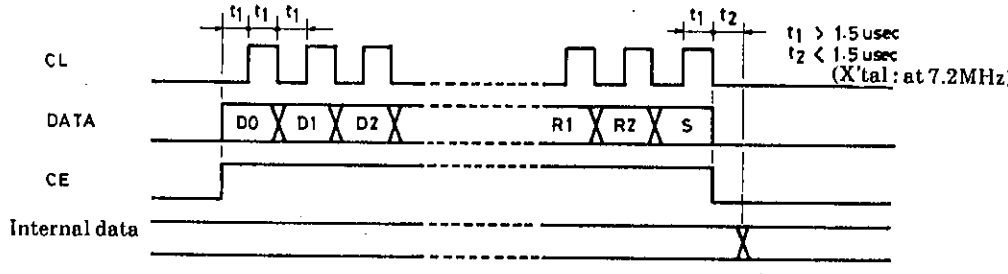

← Inputting starts at D0.

D0	D1	D2	D3	D4	D5	D6	D7	D8	D9	D10	D11	D12	D13	T0	T1	B0	B1	B2	TB	R0	R1	R2	S

(1) D0 (LSB) to D13 (MSB) : Division ratio data

For FMIN, use D0 to D13 ; for AMIN, use D4 to D13.

D0	D1	D2	D3	D4	D5	D6	D7	D8	D9	D10	D11	D12	D13	
1	1	1	1	0	1	1	1	1	1	0	0	0	0	
LSB													MSB	→ FMIN division ratio = 1007
X	X	X	X	1	0	0	0	1	0	0	1	0	0	
				LSB									MSB	→ AMIN division ratio = 145

Continued on next page.

Continued from preceding page.

Example

① FM 100kHz Step (f_{ref}=100kHz)

FM VCO=100.7MHz (FM RF=90.0MHz, IF=+10.7MHz)

Division Ratio=100.7MHz (FM VCO)÷100kHz(f_{ref})=1007 → $3EF_{(HEX)}$

② AM 10kHz Step (f_{ref}=10kHz)

AM VCO=1450kHz (AM RF=1000kHz, IF=+450kHz)

Division Ratio=1450kHz (AM VCO)÷10kHz (f_{ref})=145 → $91_{(HEX)}$

(2) T0, T1 : For LSI test (0, 0)

(3) B0 to B2, TB : Band data
: Time base data

Input				Output		
B0	B1	B2	TB	$\overline{BO1}$	$\overline{BO2}$	$\overline{BO3}$
0	0	0	0	*	*	*
0	0	1	0	0	0	1
0	1	0	0	0	1	0
0	1	1	0	0	1	1
1	0	0	0	1	0	0
1	0	1	0	1	0	1
1	1	0	0	1	1	0
1	1	1	0	1	1	1
0	0	0	1	TB	*	*
×	1	0	1	TB	1	0
×	0	1	1	TB	0	1
×	1	1	1	TB	1	1
1	0	0	1	TB	0	0

* : Determined by R0 to R2
× : Don't care
TB : 8Hz

(4) R0 to R2 : Reference frequency data

R0	R1	R2	fref	$\overline{B01}$	$\overline{B02}$	$\overline{B03}$	IF Count
0	0	0	100 kHz	1	1	0	10.7MHz±10kHz
0	0	1	50	1	1	0	
0	1	0	25	1	1	0	
0	1	1	5	0	0	1	450kHz± 3 kHz
1	0	0	10	1	0	1	
1	0	1	9	1	0	1	
1	1	0	1	0	1	1	450kHz±0.6kHz
1	1	1	5	0	0	1	450kHz± 3 kHz

(Note) B0 to B2=0

(5) S : Divider select data
'1' : FMIN, '0' : AMIN

IF Count Circuit : Circuit to stop auto tuning

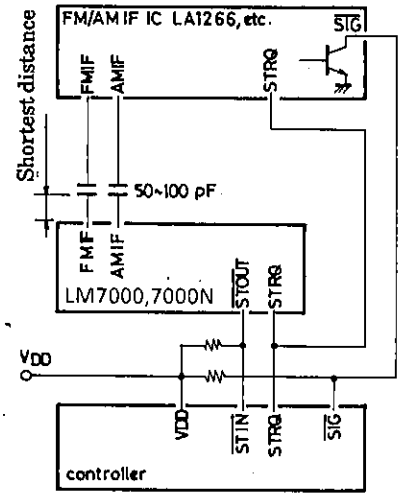

- When in the neighborhood of a broadcasting station, "$\overline{SIG}$" signal is output, setting $\overline{SIG}$ of the controller to "0".
- "STRQ" signal is applied to the LM7000 and IF IC from the controller.
- IF signal is applied to the LM7000 from the IF IC and the LM7000 counts this signal.
- When a specified count value is reached, "$\overline{STOUT}$" signal is applied to the controller from the LM7000, stopping auto tuning.

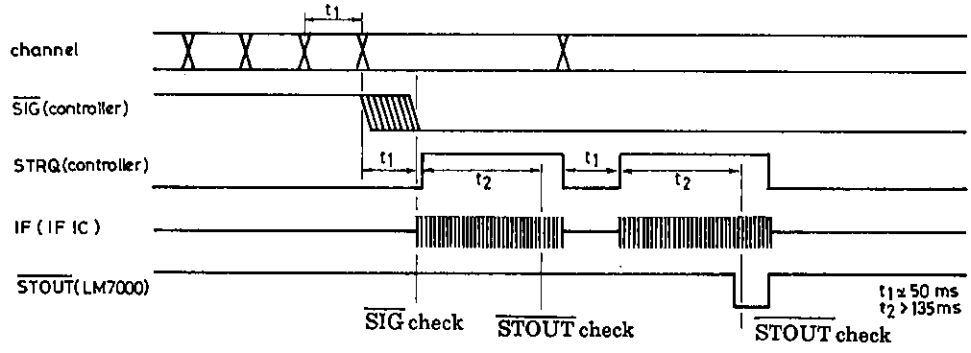

- Counting is performed only at "STRQ" = 1.
- The count time is 120msec.
- For FM, the count error is shown below.
  (Example : For 50Hz-100% modulation, the maximum count error is 5kHz.)

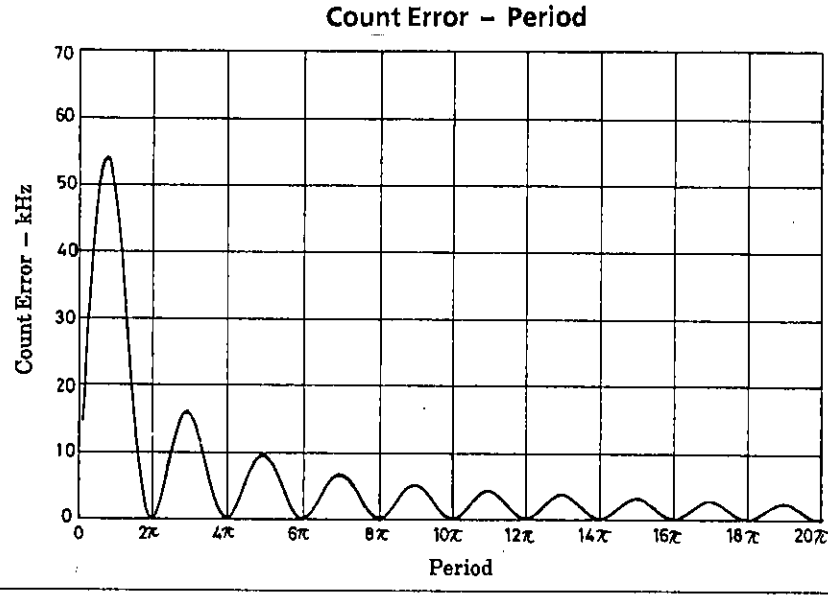

Sample Connection to Controller

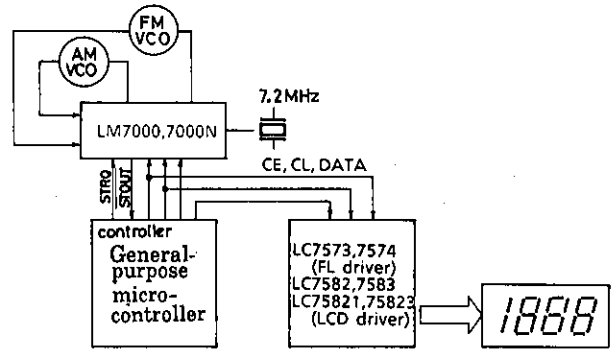

Notes for Using PLL IC

(1) The layout nearby PLL-IC.

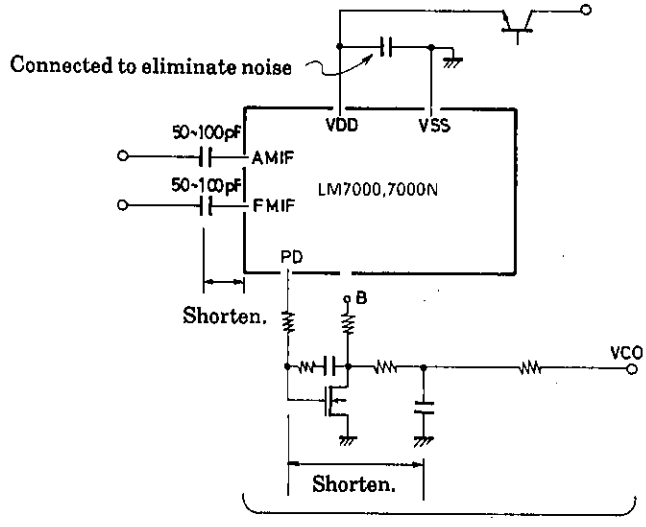

Surround this section with the ground pattern, because it is in a high impedance state and is very susceptible to noise.

(2) State of output ports ($\overline{BO1}$ to $\overline{BO3}$) at power-on.
The output ports are undefined until the control data is transmitted.
The $\overline{BO1}$ and $\overline{BO3}$ ports may output a internal clock of PLL-IC, and so don't forget to transmitte of control data after power-on.
The control data should be input only after X'tal OSC have become stable.

(3) VCO design.
At design of the VCO, try to do not stop oscillation no matter what Tuning Voltage(Vtune) is 0 Volt.
When the VCO oscillation stops, the PLL is possible to become a dead -lock condition.

Differences Between the LM7000 and LM7000N

The only difference between LM7000 and LM7000N is the phase detector dead zone. Otherwise, they are identical.

Continued on next page.

Continued from preceding page.

Dead Zone

The phase detector shown in figure 1 compares the reference frequency (f_r) with f_p. The characteristics of the phase detector are shown in figure 2. A phase detector ideally should output a voltage proportional to the phase difference (ϕ) as shown by curve (A), but in reality, delays in the internal circuitry mean that small phase differences cannot be detected. This causes the dead zone shown by curve (B). To realize a large signal-to-noise ratio, this dead zone should be made as small as possible.

Standard models, however, can have a rather wide dead zone. When there is a strong RF input signal, with these models, the VCO can be modulated to compensate for part of the RF signal being leak to the VCO from the MIX. In the case of dead zone is small, the VCO output is modulated and a beat between the RF and VCO is created.

Figure 1

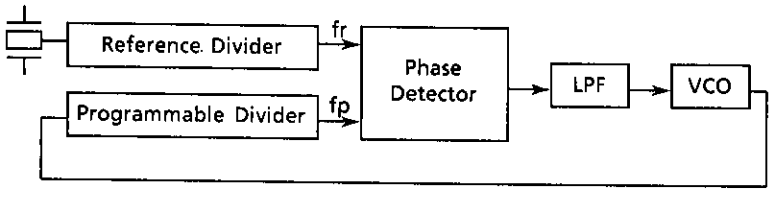

Figure 2

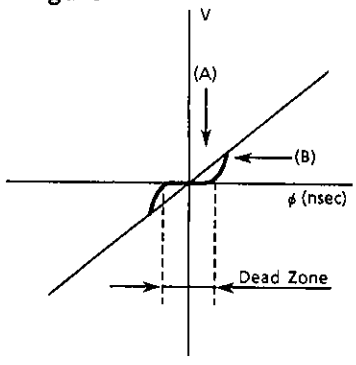

LM7000/LM7000N

Because of the above reasons, the LM7000 and LM7000N were developed with different dead zones.

LM7000 : Dead zone ≒ 0 ns, S/N is 90 to 100 dB or greater

LM7000N : Dead zone ≒ 5 to 10 ns, for standard models

Note

If the LM7000N is used in a circuit designed for the LM7000, the S/N ratio will decrease.

■ No products described or contained herein are intended for use in surgical implants, life-support systems, aerospace equipment, nuclear power control systems, vehicles, disaster/crime-prevention equipment and the like, the failure of which may directly or indirectly cause injury, death or property loss.

■ Anyone purchasing any products described or contained herein for an above-mentioned use shall:
① Accept full responsibility and indemnify and defend SANYO ELECTRIC CO., LTD., its affiliates, subsidiaries and distributors and all their officers and employees, jointly and severally, against any and all claims and litigation and all damages, cost and expenses associated with such use:
② Not impose any responsibility for any fault or negligence which may be cited in any such claim or litigation on SANYO ELECTRIC CO., LTD., its affiliates, subsidiaries and distributors or any of their officers and employees jointly or severally.

■ Information (including circuit diagrams and circuit parameters) herein is for example only; it is not guaranteed for volume production. SANYO believes information herein is accurate and reliable, but no guarantees are made or implied regarding its use or any infringements of intellectual property rights or other rights of third parties.